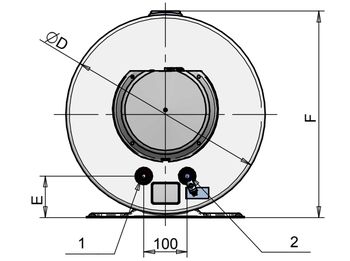

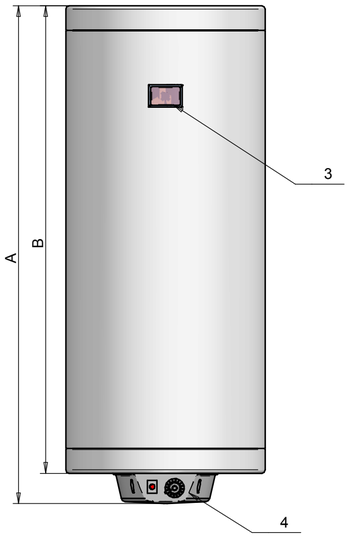

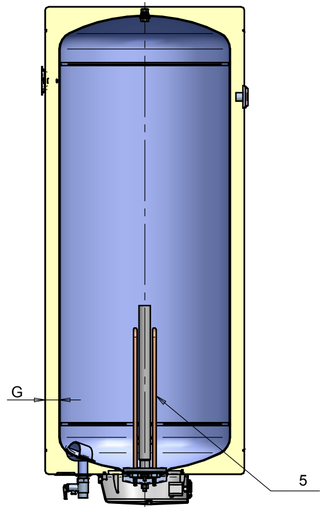

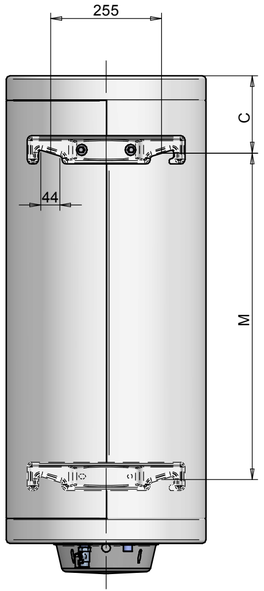

WATER HEATERS "AQUA" FOR VERTICAL MOUNTING ON THE WALL								
CHARACTERISTICS								
Model	...	72269G	72267G	72268G	72265G	72270G	72266G	72280MG
Rated volume	L	30	50	80	80	100	120	150
Rated presure	MPa	0,8	0,8	0,8	0,8	0,8	0,8	0,8
Rated voltage	V~	230	230	230	230	230	230	230
Rated electrical power	kW	1,5	1,5; 2,0	1,5; 2,0	1,5; 2,0	1,5; 2,0	2,0	2,0
Warm-up time from 12-75 °C	h	1,5	2,5; 1,87	4 ; 3	4 ; 3	5 ; 3,7	4,5	5,6
MIX 37 °C (temperature of the water in the water tank: 75 °C; water temperature of supply water: 12 °C)	L	76	126	195	195	250	297	378
Weight	kg	13.5	18	24.5	24	29	32.5	40
CONNECTIONS								
1: Hot water outlet		G1/2 M	G1/2 M	G1/2 M	G1/2 M	G1/2 M	G1/2 M	G1/2 M
2: Cold water inlet - Drain		G1/2 M	G1/2 M	G1/2 M	G1/2 M	G1/2 M	G1/2 M	G1/2 M
3: Temperature indicator		-	-	-	-	-	-	-
4: Control panel		-	-	-	-	-	-	-
5: Flange with heating element		-	-	-	-	-	-	-
DIMENSIONS								
A	mm	540	735	1050	810	985	1150	1400
B	mm	470	665	980	740	915	1080	1330
C	mm	145	145	145	175	175	175	175
D	mm	385	385	385	460	460	460	460
E	mm	80	80	80	96	96	96	96
F	mm	400	400	400	474	474	474	474
G (Insulation thickness)- CFC free polyurethane	mm	32	32	32	32	32	32	32
M	mm	-	-	-	-	-	-	1003